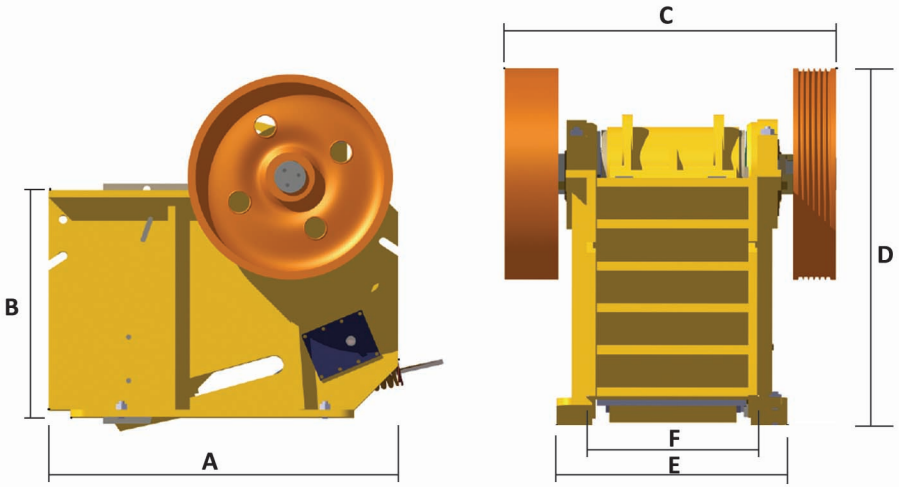

Jaw Crusher

Size(mm)	A	B	C	D	E	F
300 x 900	1650	1040	2200	1660	1360	1060
400 x 900	1800	1100	2200	1850	1380	1060
600 x 900	2400	1600	2300	2400	1500	1140
900 x 1100	2550	2120	2400	3000	1700	1320

Models	Crushing Chamber (mm)	Body Thickness (mm)	Total Product (ton/perhour)	Engine Power (kw)	Machine Weight (kg)
30 x 90	250	40	27 - 80	45	8000
40 x 90	340	40	40 - 110	55	11000
60 x 90	480	60	90 - 175	75	21000
90 x 110	750	60	125 - 225	110	29000

Close Side Setting (mm)	Models			
	30 x 90 Capacities(t/h)	40 x 90 Capacities(t/h)	60 x 90 Capacities(t/h)	90 x 110 Capacities(t/h)
Under 30 mm	27 - 42			
Under 40 mm	38 - 52	40 - 55		
Under 50 mm	47 - 62	50 - 65		
Under 65 mm	57 - 72	60 - 80		
Under 75 mm	67 - 80	70 - 90		
Under 90 mm		80 - 100	90 - 110	125 - 165
Under 100 mm		90 - 110	105 - 120	135 - 175
Under 125 mm			115 - 130	145 - 185
Under 150 mm			142 - 165	155 - 195
Under 170 mm			160 - 175	165 - 205
Under 200 mm				175 - 215
Under 250 mm				185 - 225